Probability and Compound Events Examples

1. A **compound event** consists of two or more **simple events**. Tossing a die is a simple event. Tossing two dice is a compound event. The probability of a compound event can be calculated if its outcomes are equally likely.

2. **Example –** If three coins are tossed, what is the probability of getting exactly two heads?

To calculate the probability, you need to know how many outcomes are possible. This may be done by using a tree diagram.

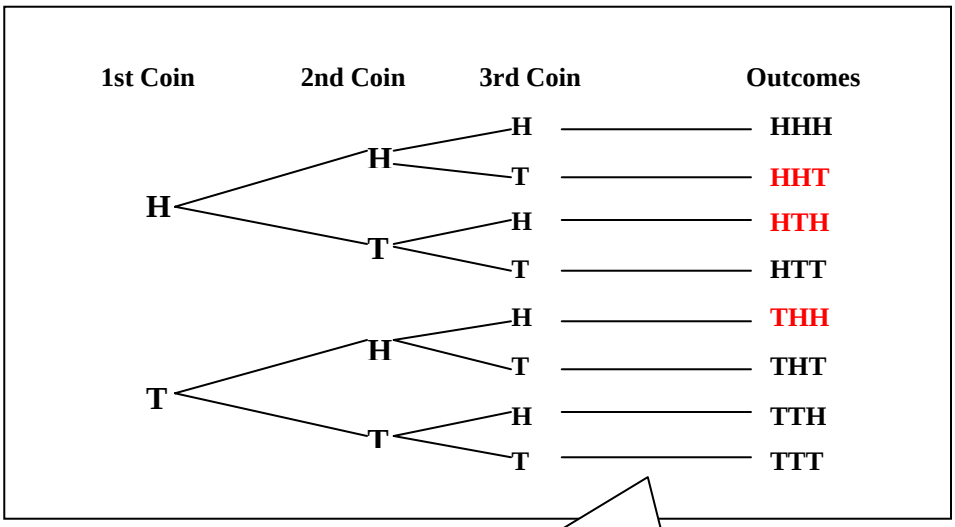

There are eight possible outcomes and three of them have exactly two heads. Therefore, the probability of getting exactly two heads in one toss of three coins is $\frac{3}{8}$ or 0.375.

You may wish to explain that these events are independent. The occurrence of heads or tails on one coin does not affect the occurrence of heads or tails on the other two coins.

© 2001, 2003 www.BeaconLearningCenter.com

3. **Example** – Jody has four bottles of soft drink – one bottle of cola, one of root beer, one of ginger ale, and one of orange. She chooses three of these bottles to take to a party. If she chooses the ginger ale, what is the probability she also chooses root beer?

To calculate the probability, you need to know how many outcomes are possible. This may be done by using a tree diagram.

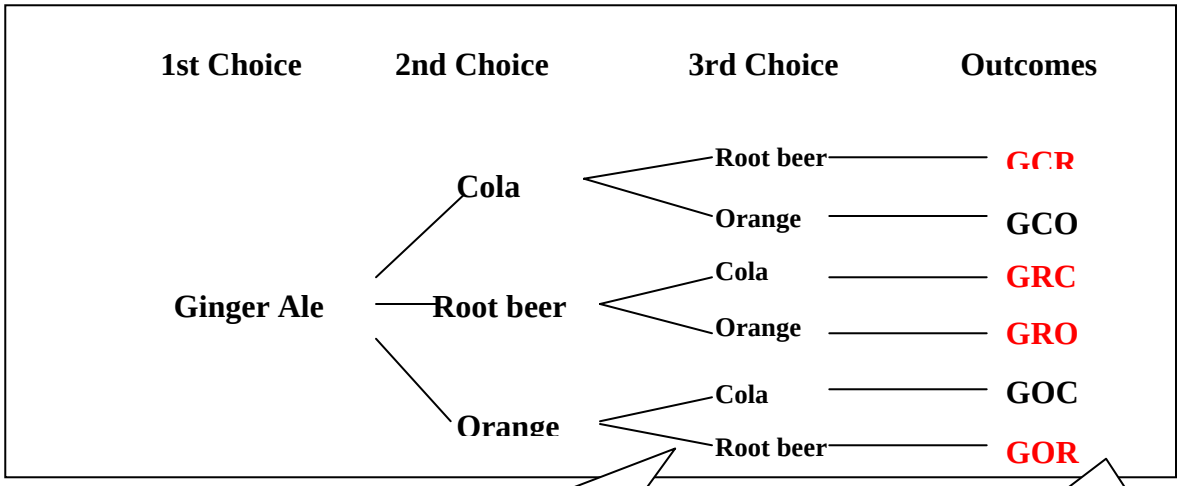

There are six ways to choose the other two bottles.

There are four ways to choose the root beer.

The probability that Jody also chooses the root beer is $\frac{4}{6} = \frac{2}{3} = .\overline{66}$

4. **Example** – Three coins are tossed once. Draw a tree diagram to show all of the possible outcomes.

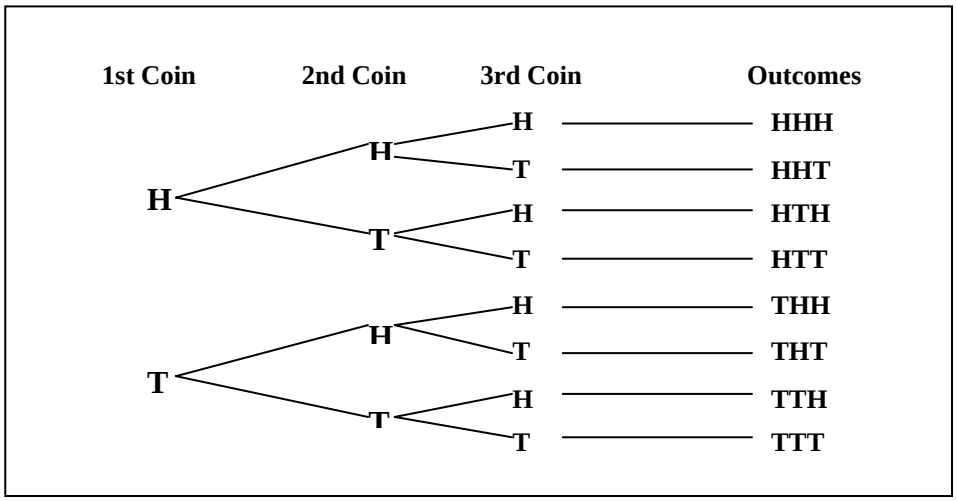

© 2001, 2003 www.BeaconLearningCenter.com

5. **Example** – A coin is tossed three times. Draw a tree diagram to show all of the possible outcomes.

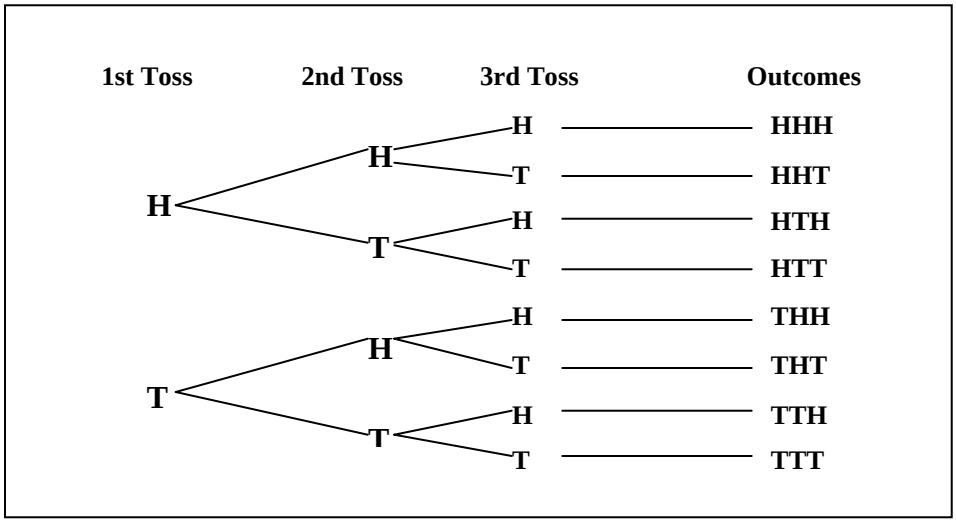

6. **Thought Provoker** – Explain why the tree diagrams are the same for the two experiments above.

When three coins are tossed, the occurrence of heads or tails on one of the coins does not affect the occurrence of heads or tails on the other coins. When one coin is tossed three times, the occurrence of heads or tails on one toss will not affect the occurrence of heads or tails on another toss. Therefore, tossing three coins at the same time produces the same outcomes as tossing one coin three times.

7. **Example** – If three coins are tossed, what is the probability of getting at most two heads?

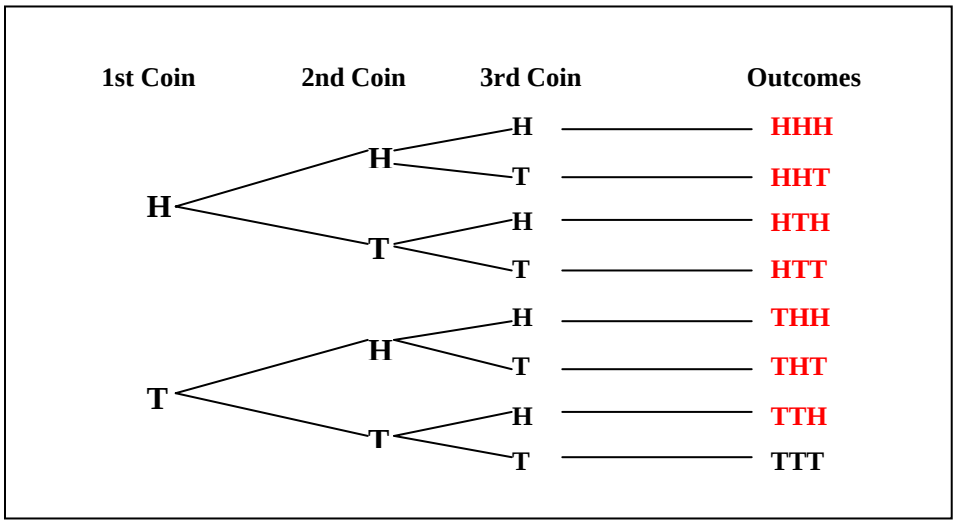

$\frac{7}{8}$ **= 0.875**

© 2001, 2003 www.BeaconLearningCenter.com

Name:_____
Date:_____
Class:_____

Probability and Compound Events Worksheet

An automobile dealer has cars available with the combinations of colors, engines, and transmissions indicated in the following tree diagram. A selection is made at random.

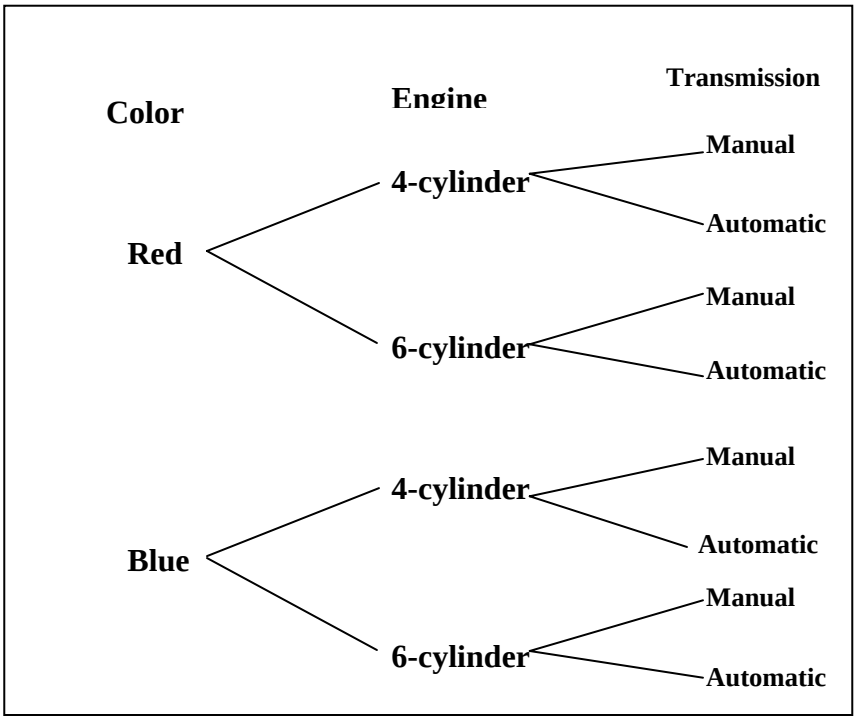

1. What is the probability of selecting a car with manual transmission?

2. What is the probability of selecting a blue car with manual transmission?

3. What is the probability of selecting a car with a 4-cylinder engine and a manual transmission?

4. What is the probability of selecting a blue car with a 6-cylinder engine and an automatic transmission?

Draw a tree diagram for questions 5 and 6. Use the results to answer each question.

© 2001, 2003 www.BeaconLearningCenter.com

5. Find the probability of getting exactly three tails when four coins are tossed.

6. Find the probability that a family with four children has exactly four girls. Assume that the probability a girl is born is the same as the probability a boy is born.

7. In Exercise 6, what is the probability that the family has two boys and two girls in any order?

8. Compare and contrast the tree diagrams for Exercise 5 and 6.

For each shrimp, lobster, or chicken dinner in a restaurant, you have a choice of soup or salad. With shrimp you may have hash browns or a baked potato. With lobster you may have rice or hash browns. With chicken you may have rice, hash browns, or a baked potato. If all combinations are equally likely to be ordered, find each probability of an order containing each of the following. Draw a tree diagram to answer each question.

9. Shrimp

10. Rice

11. Shrimp and rice

12. Soup and hash browns

13. Chicken, salad, and rice

© 2001, 2003 www.BeaconLearningCenter.com

Bill, Raul, and Joe are in a bicycle race. If each boy has an equal chance of winning, find each probability. Draw a tree diagram to answer each question.

14. Joe wins the race.

15. Raul finishes last.

16. Joe, Raul, and Bill finish first, second, and third, respectively.

Adam's class set up a lottery with two-digit numbers. The first digit is a number from 1 to 4. The second digit is a number from 3 to 8. Draw a tree diagram to answer each question.

17. What is the probability that 44 was the winning number?

18. What is the probability that a number with a 2 in it wins?

© 2001, 2003 www.BeaconLearningCenter.com

Probability and Compound Events Worksheet Key

An automobile dealer has cars available with the combinations of colors, engines, and transmissions indicated in the following tree diagram. A selection is made at random.

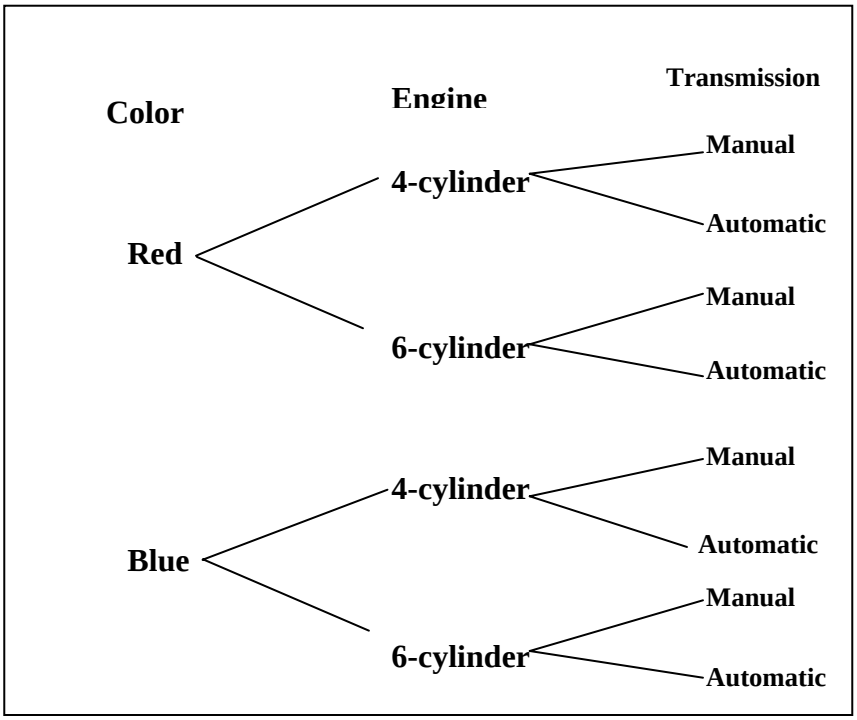

1. What is the probability of selecting a car with manual transmission?

   $\frac{1}{2}$ or 0.5

2. What is the probability of selecting a blue car with manual transmission?

   $\frac{1}{4}$ or 0.25

3. What is the probability of selecting a car with a 4-cylinder engine and a manual transmission?

   $\frac{1}{4}$ or 0.25

4. What is the probability of selecting a blue car with a 6-cylinder engine and an automatic transmission?

   $\frac{1}{8}$ or 0.124

© 2001, 2003 www.BeaconLearningCenter.com

Draw a tree diagram for questions 5 and 6. Use the results to answer each question.

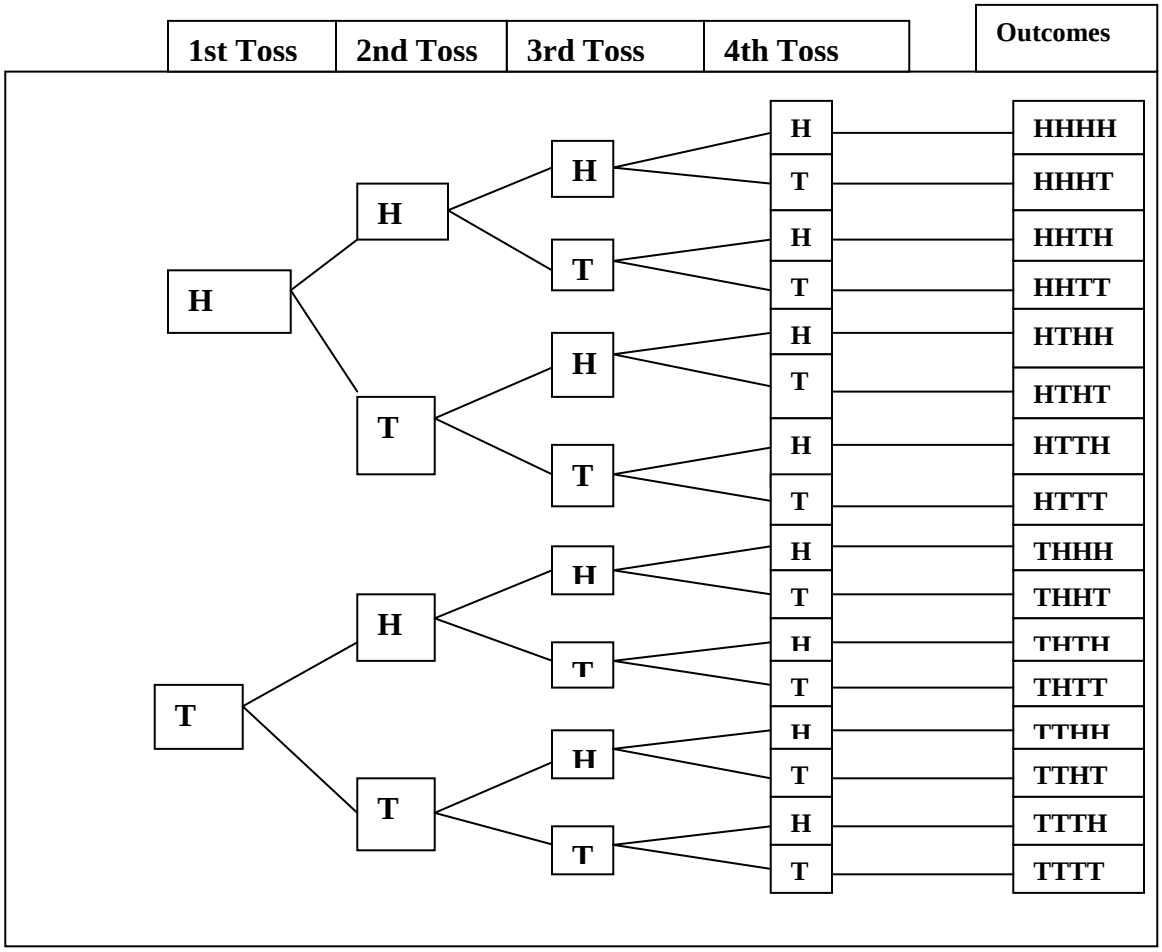

5. Find the probability of getting exactly three tails when four coins are tossed.

$\frac{1}{4}$ or 0.25

© 2001, 2003 www.BeaconLearningCenter.com

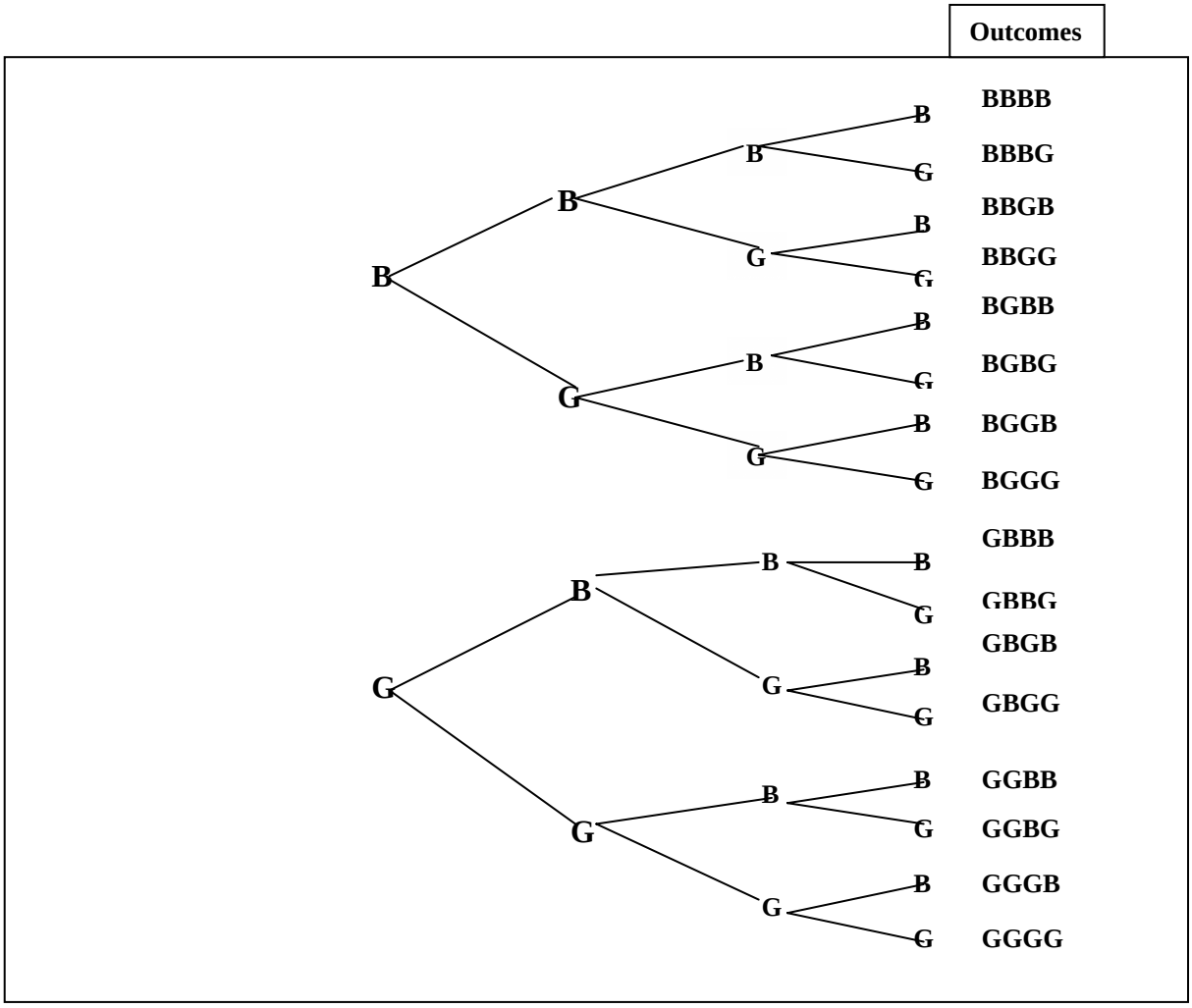

6. Find the probability that a family with four children has exactly four girls.

$$\frac{1}{16} \text{ or } 0.65$$

7. In Exercise 6, what is the probability that the family has two boys and two girls in any order?

$$\frac{3}{8} \text{ or } 0.375$$

8. Compare and contrast the tree diagrams for Exercise 5 and 6.

Answers may vary. A typical answer is that the tree diagrams are the same.

© 2001, 2003 www.BeaconLearningCenter.com

For each shrimp, lobster, or chicken dinner in a restaurant, you have a choice of soup or salad. With shrimp you may have hash browns or a baked potato. With lobster you may have rice or hash browns. With chicken you may have rice, hash browns, or a baked potato. If all combinations are equally likely to be ordered, find each probability of an order containing each of the following. Draw a tree diagram to answer each question.

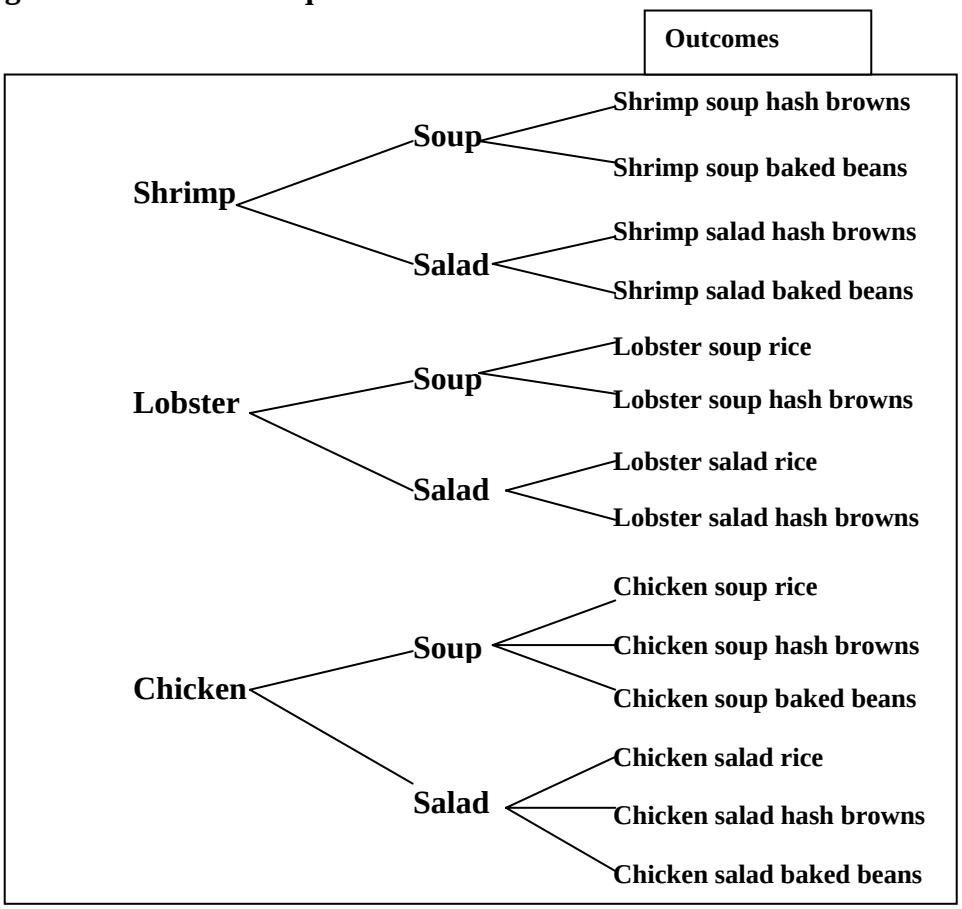

9. Shrimp
   $\frac{2}{7}$ or 0.286

10. Rice
    $\frac{2}{7}$ or 0.286

11. Shrimp and rice
    0

12. Soup and hash browns
    $\frac{3}{14}$ or 0.214

13. Chicken, salad, and rice
    $\frac{1}{14}$ or 0.071

© 2001, 2003 www.BeaconLearningCenter.com

Bill, Raul, and Joe are in a bicycle race. If each boy has an equal chance of winning, find each probability. Draw a tree diagram to answer each question.

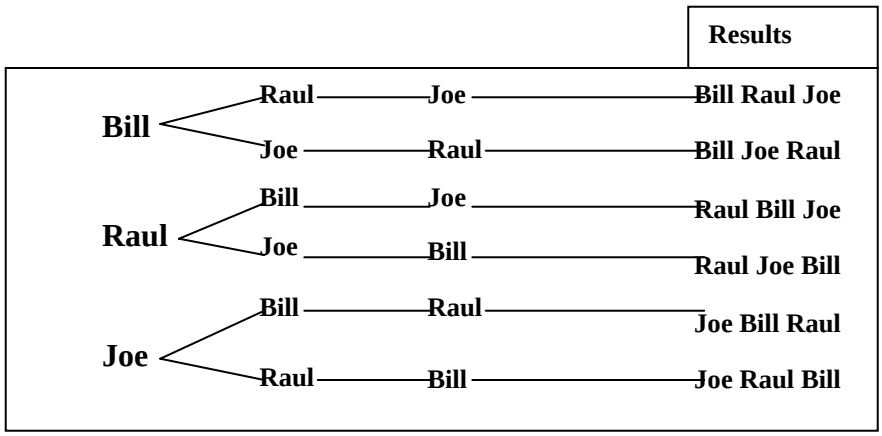

14. Joe wins the race.

$\frac{1}{3}$ or $0.\overline{3}$

15. Raul finishes last.

$\frac{1}{3}$ or $0.\overline{3}$

16. Joe, Raul, and Bill finish first, second, and third, respectively.

$\frac{1}{6}$ or $0.1\overline{6}$

© 2001, 2003 www.BeaconLearningCenter.com

Adam's class set up a lottery with two-digit numbers. The first digit is a number from 1 to 4. The second digit is a number from 3 to 8. Draw a tree diagram to answer each question.

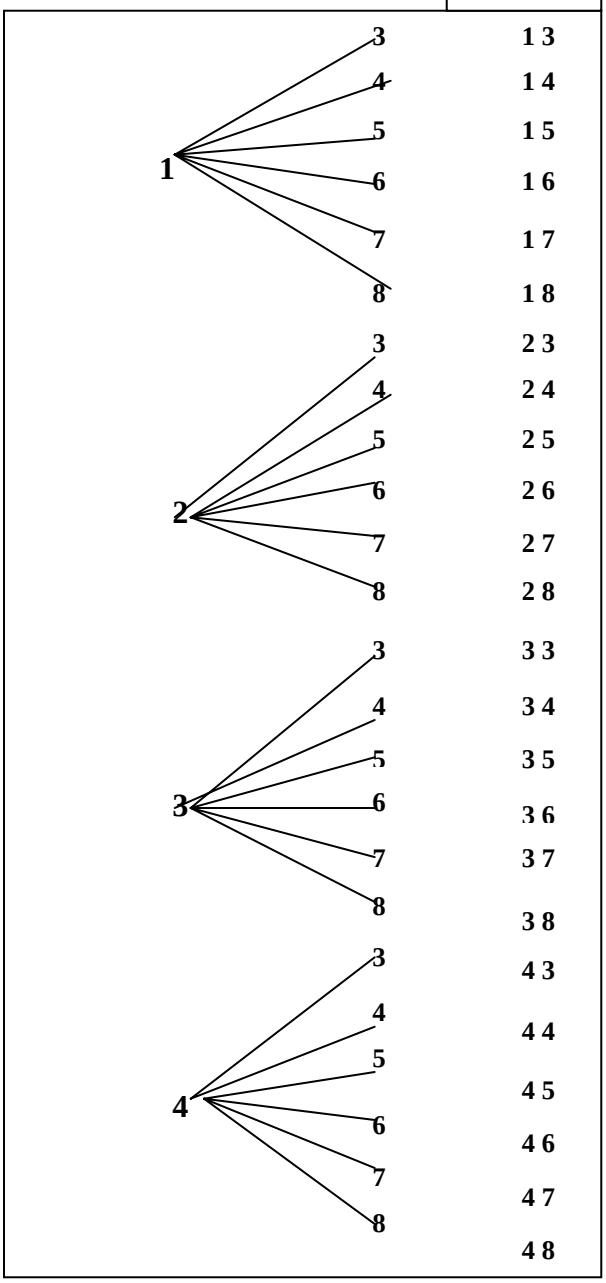

17. What is the probability that 44 was the winning number?

$\frac{1}{24}$ or $0.04\overline{6}$

18. What is the probability that a number with a 2 in it wins? ➔ $\frac{1}{4}$ or 0.25

© 2001, 2003 www.BeaconLearningCenter.com

Student Name: _____

Date: _____

Probability and Compound Events Checklist

1. On questions 1 through 4, did the student write the probability correctly based on the tree diagram?

    a. All four (20 points)
    b. Three of the four (15 points)
    c. Two of the four (10 points)
    d. One of the four (5 points)

2. On questions 5 and 6, did the student draw the tree diagram correctly?

    a. Both (10 points)
    b. One of the two (5 points)

3. On questions 5 through 7, did the student find the probability correctly?

    a. All three (15 points)
    b. Two of the three (10 points)
    c. One of the three (5 points)

4. On question 8, did the student contrast Exercise 5 and 6 correctly?

    a. Yes (10 points)
    b. Presented some key parts, but others were off base (5 points)

5. On questions 9 through 13, did the student draw the tree diagram correctly?

    a. Yes (10 points)
    b. Majority of the tree was correct (5 points)

6. On questions 9 through 13, did the student find the probability correctly?

    a. All five (25 points)
    b. Four of the five (20 points).
    c. Three of the five (15 points).
    d. Two of the five (10 points).
    e. One of the five (5 points).

7. On questions 14 through 16, did the student draw the tree diagram correctly?

    a. Yes (10 points)
    b. Majority of the tree was correct (5 points)

© 2001, 2003 www.BeaconLearningCenter.com

8. On questions 14 through 16, did the student find the probability correctly?

    a. All three (15 points)
    b. Two of the three (10 points)
    c. One of the three (5 points)

9. On questions 17 and 18, did the student draw the tree diagram correctly?

    a. Yes (10 points)
    b. Majority of the tree was correct (5 points)

10. On questions 17 and 18, did the student find the probability correctly?

    a. Both (10 points)
    b. One of the two (5 points)

Total Number of Points _____

A 121 points and above

B 108 points and above

C 94 points and above

D 81 points and above

F 80 points and below

Any score below C needs remediation!

© 2001, 2003 www.BeaconLearningCenter.com